Deep groove ball bearing 6310-2NSE9C3 NACHI

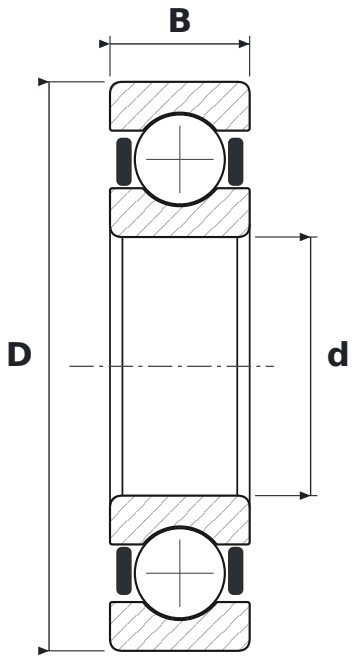

DIMENSIONS

d	bore diameter	**50 mm**
D	outside diameter	**110 mm**
B	width	**27 mm**

SPECIFICATIONS

Manufacturer	**NACHI**
Manufacturer designation	**6310-2NSE9C3**
Rolling elements	**single-row ball bearing**
2RS	**contact rubber seals, both sides**
C3	**radial clearance greater than normal**