Deep groove ball bearing 6310 C3 KOYO

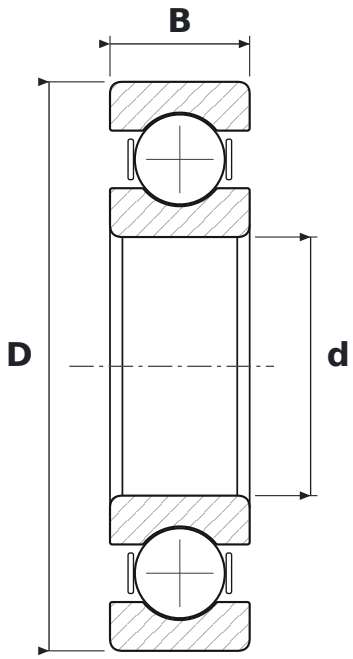

DIMENSIONS

d	bore diameter	**50 mm**
D	outside diameter	**110 mm**
B	width	**27 mm**

WHAT 6310 C3 MEANS

63	łożysko kulkowe zwykłe (6), seria średnic 3 – średnia
C3	radial clearance greater than normal

SPECIFICATIONS

Manufacturer	**KOYO**
Manufacturer designation	**6310 C3**
Rolling elements	**single-row ball bearing**