Deep groove ball bearing 6310-NSE9 NACHI

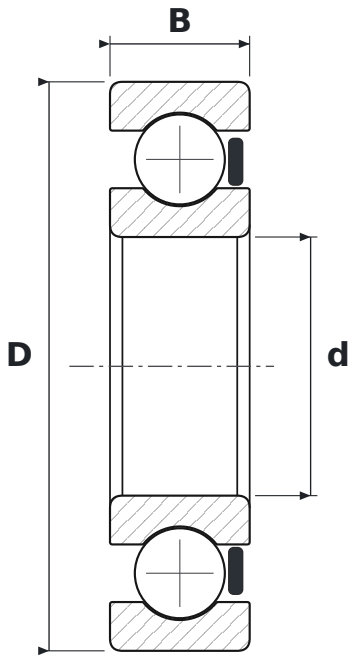

DIMENSIONS

d	bore diameter	**50 mm**
D	outside diameter	**110 mm**
B	width	**27 mm**

SPECIFICATIONS

Manufacturer	**NACHI**
Manufacturer designation	**6310-NSE9**
Rolling elements	**single-row ball bearing**
RS	**contact rubber seal, one side**
Radial internal clearance	**CN – normal**