Deep groove ball bearing 6310-2Z/C3 SKF

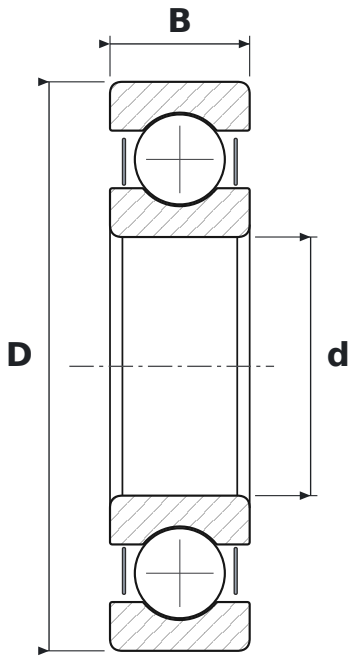

DIMENSIONS

d	bore diameter	**50 mm**
D	outside diameter	**110 mm**
B	width	**27 mm**

WHAT 6310-2Z/C3 MEANS

63	łożysko kulkowe zwykłe (6), seria średnic 3 – średnia
2Z	steel shields, both sides
C3	radial clearance greater than normal

SPECIFICATIONS

Manufacturer	**SKF**
Manufacturer designation	**6310-2Z/C3**
Rolling elements	**single-row ball bearing**
Basic dynamic load rating C	**65 kN**
Basic static load rating C0	**38 kN**
Mass	**1.09 kg**