CASTOMER

DATASHEET

Deep groove ball bearing 6311 C4 NACHI

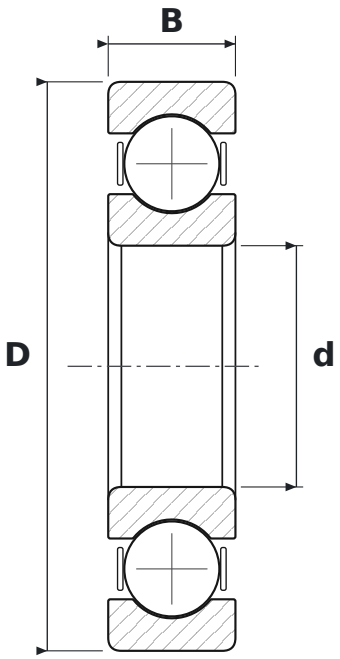

DIMENSIONS

d	bore diameter	**55 mm**
D	outside diameter	**129.7 mm**
B	width	**29 mm**

WHAT 6311 C4 MEANS

63	łożysko kulkowe zwykłe (6), seria średnic 3 – średnia
C4	large radial clearance

SPECIFICATIONS

Manufacturer	**NACHI**
Manufacturer designation	**6311 C4**
Rolling elements	**single-row ball bearing**