Deep groove ball bearing 6311-CM FAG

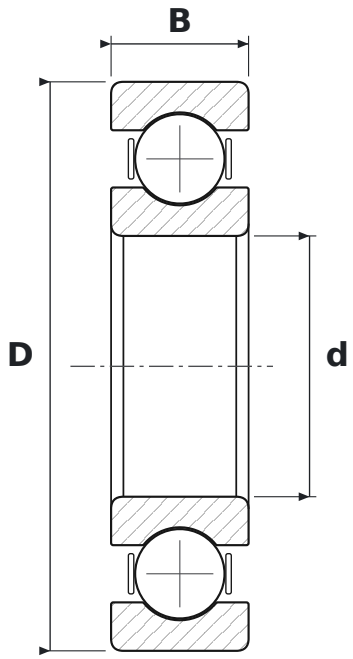

DIMENSIONS

d	bore diameter	**55 mm**
D	outside diameter	**120 mm**
B	width	**29 mm**

WHAT 6311-CM MEANS

63	łożysko kulkowe zwykłe (6), seria średnic 3 – średnia
CM	clearance for electric motors (quiet running)

SPECIFICATIONS

Manufacturer	**FAG**
Manufacturer designation	**6311-CM**
Rolling elements	**single-row ball bearing**
Mass	**1.6 kg**