CASTOMER

DATASHEET

Deep groove ball bearing 6311 F605 SNR

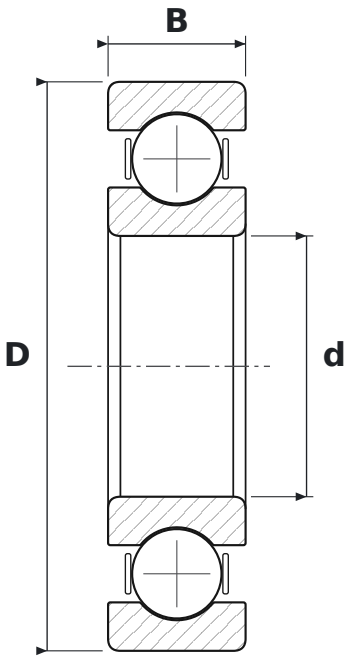

DIMENSIONS

d	bore diameter	**55 mm**
D	outside diameter	**120 mm**
B	width	**29 mm**

SPECIFICATIONS

Manufacturer	**SNR**
Manufacturer designation	**6311 F605**
Rolling elements	**single-row ball bearing**
Seal	**open – no seals**
Radial internal clearance	**CN – normal**
Mass	**1.344 kg**