Deep groove ball bearing 6311 ZZ KOYO

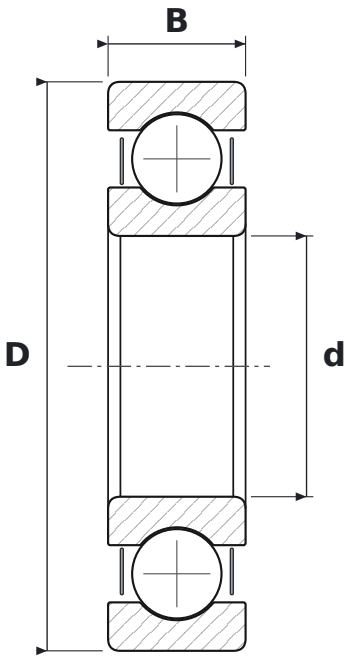

DIMENSIONS

d	bore diameter	**55 mm**
D	outside diameter	**120 mm**
B	width	**29 mm**

WHAT 6311 ZZ MEANS

63	łożysko kulkowe zwykłe (6), seria średnic 3 – średnia
ZZ	blaszki ochronne, dwustronne

SPECIFICATIONS

Manufacturer	**KOYO**
Manufacturer designation	**6311 ZZ**
Rolling elements	**single-row ball bearing**