CASTOMER

DATASHEET

# Deep groove ball bearing 6311-2Z/C3 SKF

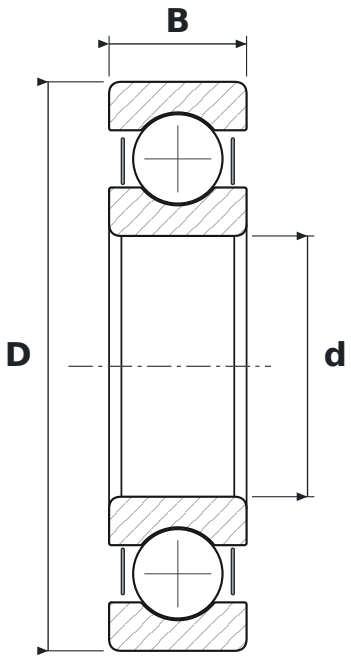


## DIMENSIONS

| | | |
|---|---|---|
| **d** | bore diameter | **55 mm** |
| **D** | outside diameter | **120 mm** |
| **B** | width | **29 mm** |

## WHAT 6311-2Z/C3 MEANS

| | |
|---|---|
| **63** | łożysko kulkowe zwykłe (6), seria średnic 3 – średnia |
| **2Z** | steel shields, both sides |
| **C3** | radial clearance greater than normal |

## SPECIFICATIONS

| | |
|---|---|
| Manufacturer | **SKF** |
| Manufacturer designation | **6311-2Z/C3** |
| Rolling elements | **single-row ball bearing** |
| Basic dynamic load rating C | **74.1 kN** |
| Basic static load rating C0 | **45 kN** |
| Mass | **1.42 kg** |