Deep groove ball bearing 6312-2Z-NR NKE

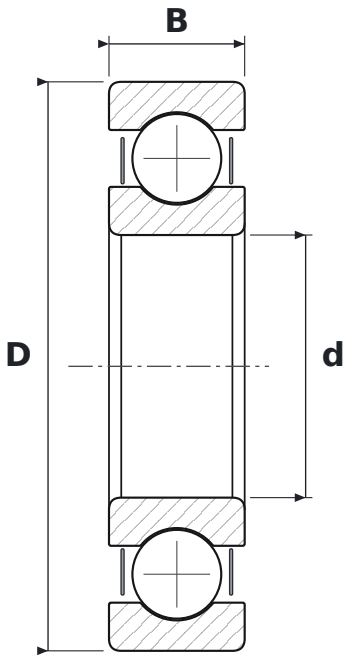

DIMENSIONS

d	bore diameter	**60 mm**
D	outside diameter	**130 mm**
B	width	**31 mm**

WHAT 6312-2Z-NR MEANS

63	łożysko kulkowe zwykłe (6), seria średnic 3 – średnia
2Z	steel shields, both sides
NR	snap ring groove with snap ring

SPECIFICATIONS

Manufacturer	**NKE**
Manufacturer designation	**6312-2Z-NR**
Rolling elements	**single-row ball bearing**