CASTOMER

DATASHEET

Deep groove ball bearing 6312-C-Z FAG

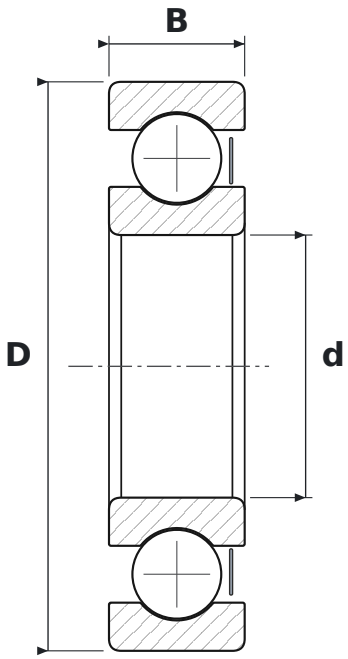

DIMENSIONS

d	bore diameter	**60 mm**
D	outside diameter	**130 mm**
B	width	**31 mm**

WHAT 6312-C-Z MEANS

63	łożysko kulkowe zwykłe (6), seria średnic 3 – średnia
C	generation C – revised internal design (FAG)
Z	steel shield, one side

SPECIFICATIONS

Manufacturer	**FAG**
Manufacturer designation	**6312-C-Z (-Z)**
Rolling elements	**single-row ball bearing**