Deep groove ball bearing 6312 CM KOYO

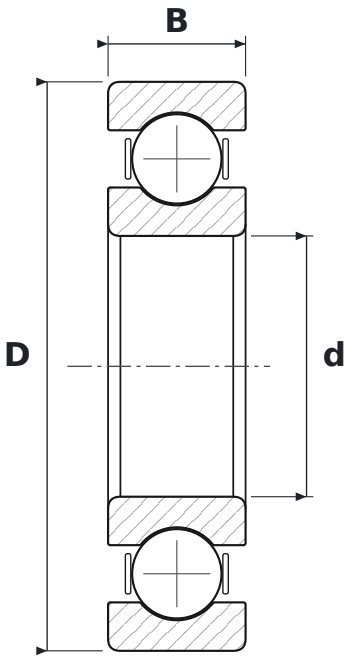

DIMENSIONS

d	bore diameter	**55 mm**
D	outside diameter	**120 mm**
B	width	**29 mm**

SPECIFICATIONS

Manufacturer	**KOYO**
Manufacturer designation	**6312 CM**
Rolling elements	**single-row ball bearing**
CM	**luz promieniowy do łożysk silników elektrycznych**
Seal	**open – no seals**
Radial internal clearance	**CN – normal**