Deep groove ball bearing 6312-ZC3 SKF

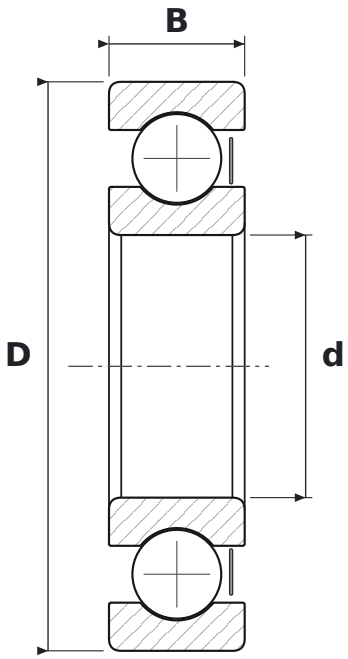

DIMENSIONS

d	bore diameter	**60 mm**
D	outside diameter	**130 mm**
B	width	**31 mm**

WHAT 6312-ZC3 MEANS

63	łożysko kulkowe zwykłe (6), seria średnic 3 – średnia
Z	steel shield, one side
C3	radial clearance greater than normal

SPECIFICATIONS

Manufacturer	**SKF**
Manufacturer designation	**6312-ZC3**
Rolling elements	**single-row ball bearing**
Basic dynamic load rating C	**85.2 kN**
Basic static load rating C0	**52 kN**