Deep groove ball bearing 6312-ZEC3 NACHI

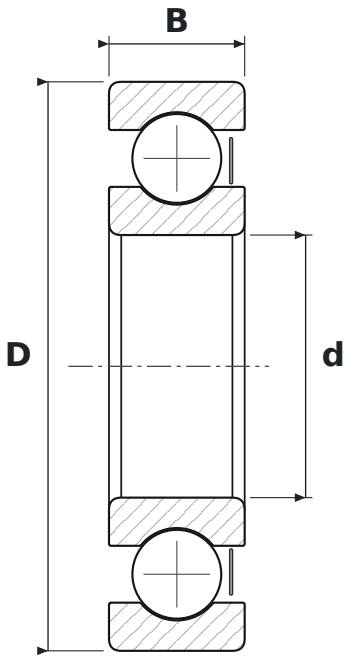

DIMENSIONS

d	bore diameter	**60 mm**
D	outside diameter	**130 mm**
B	width	**31 mm**

WHAT 6312-ZEC3 MEANS

63	łożysko kulkowe zwykłe (6), seria średnic 3 – średnia
ZE	blaszka ochronna, jednostronna
C3	radial clearance greater than normal

SPECIFICATIONS

Manufacturer	**NACHI**
Manufacturer designation	**6312-ZEC3**
Rolling elements	**single-row ball bearing**