Deep groove ball bearing 6313 /C4 SKF

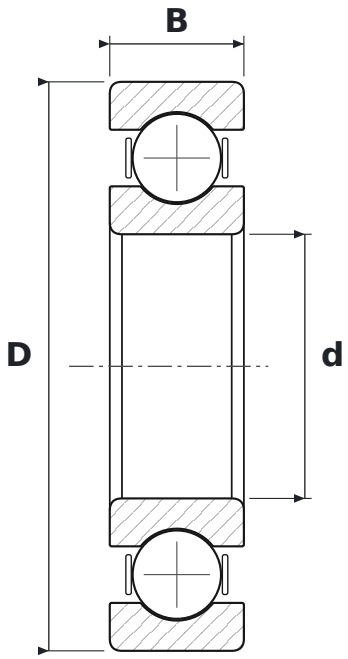

DIMENSIONS

d	bore diameter	**65 mm**
D	outside diameter	**140 mm**
B	width	**33 mm**

WHAT 6313 /C4 MEANS

63	łożysko kulkowe zwykłe (6), seria średnic 3 – średnia
C4	large radial clearance

SPECIFICATIONS

Manufacturer	**SKF**
Manufacturer designation	**6313 /C4**
Rolling elements	**single-row ball bearing**
Basic dynamic load rating C	**97.5 kN**
Basic static load rating C0	**60 kN**