# Deep groove ball bearing 6313-C-C3 FAG

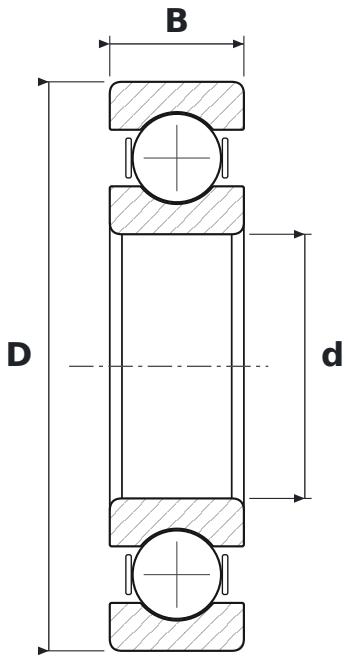


## DIMENSIONS

| | | |
|---|---|---|
| **d** | bore diameter | **65 mm** |
| **D** | outside diameter | **140 mm** |
| **B** | width | **33 mm** |

## WHAT 6313-C-C3 MEANS

| | |
|---|---|
| **63** | łożysko kulkowe zwykłe (6), seria średnic 3 – średnia |
| **C** | generation C – revised internal design (FAG) |
| **C3** | radial clearance greater than normal |

## SPECIFICATIONS

| | |
|---|---|
| Manufacturer | **FAG** |
| Manufacturer designation | **6313-C-C3** |
| Rolling elements | **single-row ball bearing** |
| Mass | **2.08 kg** |