# Deep groove ball bearing 6313 NKE

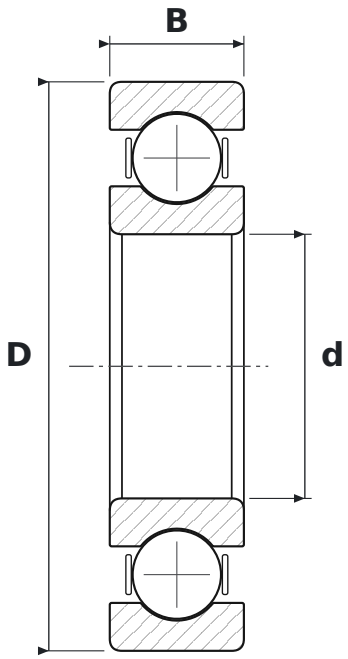


## DIMENSIONS

| | | |
|---|---|---|
| **d** | bore diameter | **65 mm** |
| **D** | outside diameter | **140 mm** |
| **B** | width | **33 mm** |

## SPECIFICATIONS

| | |
|---|---|
| Manufacturer | **NKE** |
| Manufacturer designation | **6313** |
| Rolling elements | **single-row ball bearing** |
| Seal | **open – no seals** |
| Radial internal clearance | **CN – normal** |
| Mass | **2.08 kg** |