Deep groove ball bearing 6314 NACHI

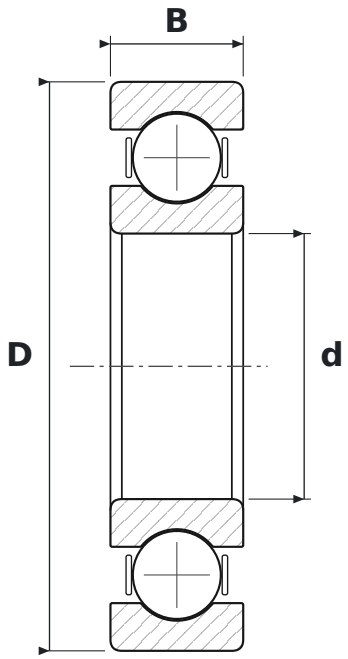

DIMENSIONS

d	bore diameter	**70 mm**
D	outside diameter	**150 mm**
B	width	**35 mm**

SPECIFICATIONS

Manufacturer	**NACHI**
Manufacturer designation	**6314**
Rolling elements	**single-row ball bearing**
Seal	**open – no seals**
Radial internal clearance	**CN – normal**