Deep groove ball bearing 6314-ZC3 NTN

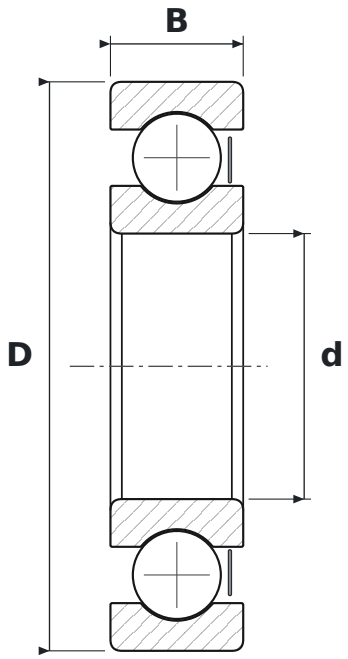

DIMENSIONS

d	bore diameter	**70 mm**
D	outside diameter	**150 mm**
B	width	**35 mm**

WHAT 6314-ZC3 MEANS

63	łożysko kulkowe zwykłe (6), seria średnic 3 – średnia
Z	steel shield, one side
C3	radial clearance greater than normal

SPECIFICATIONS

Manufacturer	**NTN**
Manufacturer designation	**6314-ZC3**
Rolling elements	**single-row ball bearing**
Mass	**2.595 kg**