Deep groove ball bearing 6314-Z-C3 FAG

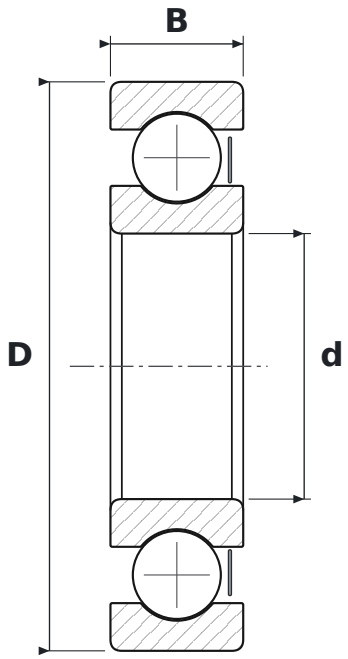

DIMENSIONS

d	bore diameter	**70 mm**
D	outside diameter	**150 mm**
B	width	**35 mm**

WHAT 6314-Z-C3 MEANS

63	łożysko kulkowe zwykłe (6), seria średnic 3 – średnia
Z	steel shield, one side
C3	radial clearance greater than normal

SPECIFICATIONS

Manufacturer	**FAG**
Manufacturer designation	**6314-Z-C3**
Rolling elements	**single-row ball bearing**