CASTOMER

DATASHEET

Deep groove ball bearing 6314-ZZ TIMKEN

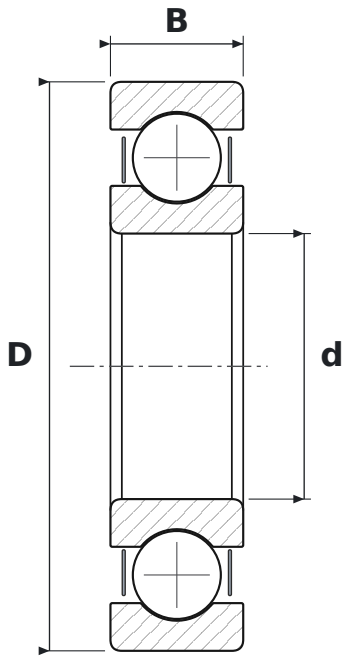

DIMENSIONS

d	bore diameter	**70 mm**
D	outside diameter	**150 mm**
B	width	**35 mm**

WHAT 6314-ZZ MEANS

63	łożysko kulkowe zwykłe (6), seria średnic 3 – średnia
ZZ	blaszki ochronne, dwustronne

SPECIFICATIONS

Manufacturer	**TIMKEN**
Manufacturer designation	**6314-ZZ**
Rolling elements	**single-row ball bearing**