# Deep groove ball bearing 6315 DDUC3 NSK

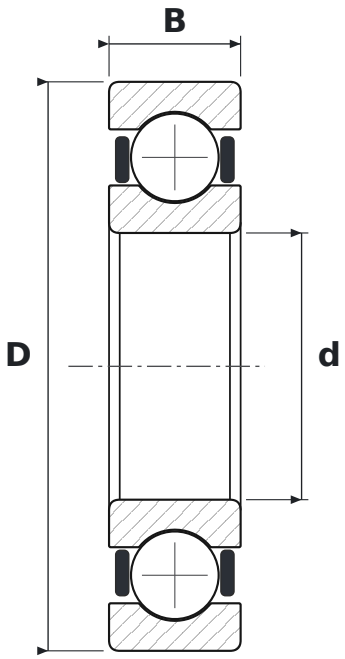


## DIMENSIONS

| | | |
|---|---|---|
| **d** | bore diameter | **75 mm** |
| **D** | outside diameter | **160 mm** |
| **B** | width | **37 mm** |

## WHAT 6315 DDUC3 MEANS

| | |
|---|---|
| **63** | łożysko kulkowe zwykłe (6), seria średnic 3 – średnia |
| **DDU** | uszczelnienia gumowe stykowe (standardowo kauczuk nitrylowy NBR), dwustronne, od −10 do +100 °C |
| **C3** | radial clearance greater than normal |

## SPECIFICATIONS

| | |
|---|---|
| Manufacturer | **NSK** |
| Manufacturer designation | **6315 DDUC3** |
| Rolling elements | **single-row ball bearing** |