CASTOMER

DATASHEET

# Deep groove ball bearing 6315-ZZC35K NTN

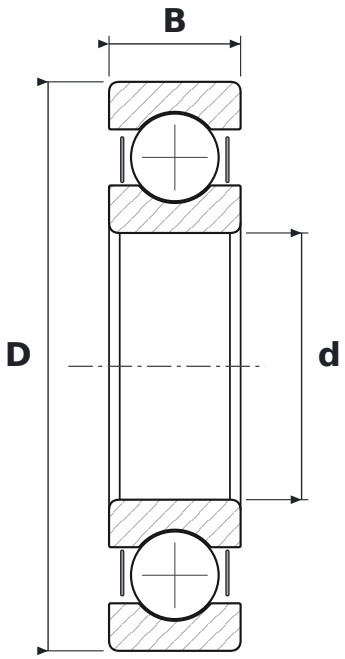


## DIMENSIONS

| | | |
|---|---|---|
| **d** | bore diameter | **75 mm** |
| **D** | outside diameter | **160 mm** |
| **B** | width | **37 mm** |

## WHAT 6315-ZZC35K MEANS

| | |
|---|---|
| **63** | łożysko kulkowe zwykłe (6), seria średnic 3 – średnia |
| **ZZ** | blaszki ochronne, dwustronne |
| **C3** | radial clearance greater than normal |
| **5K** | smar Kyodo Yushi Multemp SRL (od −40 do +150 °C) |

## SPECIFICATIONS

| | |
|---|---|
| Manufacturer | **NTN** |
| Manufacturer designation | **6315-ZZC35K** |
| Rolling elements | **single-row ball bearing** |
| Mass | **3.02 kg** |