Deep groove ball bearing 6315 ZZEC3 NACHI

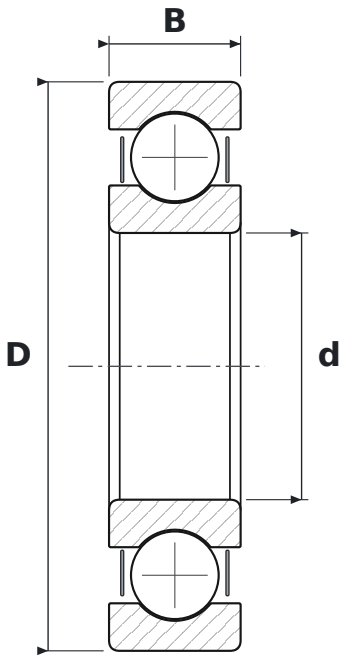

DIMENSIONS

d	bore diameter	**75 mm**
D	outside diameter	**160 mm**
B	width	**37 mm**

WHAT 6315 ZZEC3 MEANS

63	łożysko kulkowe zwykłe (6), seria średnic 3 – średnia
ZZE	blaszki ochronne, dwustronne
C3	radial clearance greater than normal

SPECIFICATIONS

Manufacturer	**NACHI**
Manufacturer designation	**6315 ZZEC3**
Rolling elements	**single-row ball bearing**