Deep groove ball bearing 6316 FAG

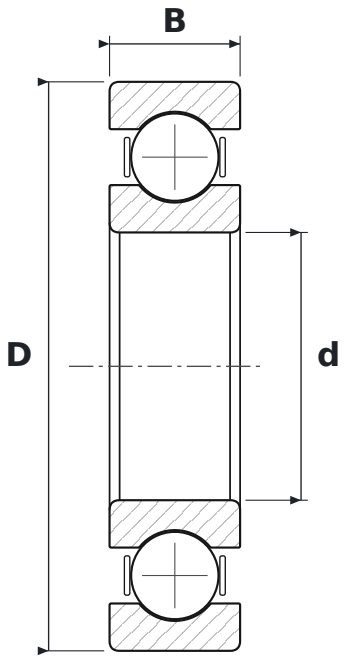

DIMENSIONS

d	bore diameter	**80 mm**
D	outside diameter	**170 mm**
B	width	**39 mm**

SPECIFICATIONS

Manufacturer	**FAG**
Manufacturer designation	**6316**
Rolling elements	**single-row ball bearing**
Seal	**open – no seals**
Radial internal clearance	**CN – normal**
Mass	**3.69 kg**