# Deep groove ball bearing 6317-2RS1 SKF

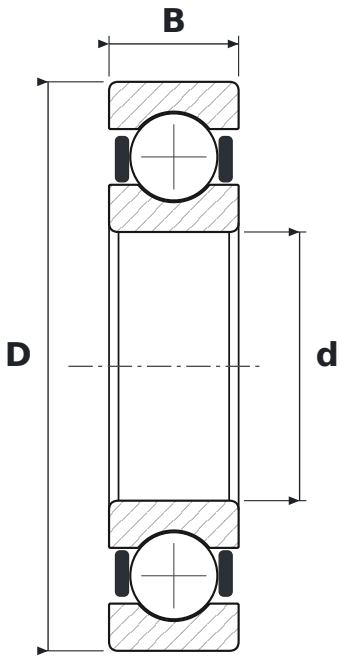


## DIMENSIONS

| | | |
|---|---|---|
| **d** | bore diameter | **85 mm** |
| **D** | outside diameter | **180 mm** |
| **B** | width | **41 mm** |

## WHAT 6317-2RS1 MEANS

| | |
|---|---|
| **63** | łożysko kulkowe zwykłe (6), seria średnic 3 – średnia |
| **2RS1** | uszczelnienia stykowe z kauczuku NBR wzmocnione blachą stalową, dwustronne |

## SPECIFICATIONS

| | |
|---|---|
| Manufacturer | **SKF** |
| Manufacturer designation | **6317-2RS1** |
| Rolling elements | **single-row ball bearing** |
| Basic dynamic load rating C | **140 kN** |
| Basic static load rating C0 | **96.5 kN** |