Deep groove ball bearing 6317 FAG

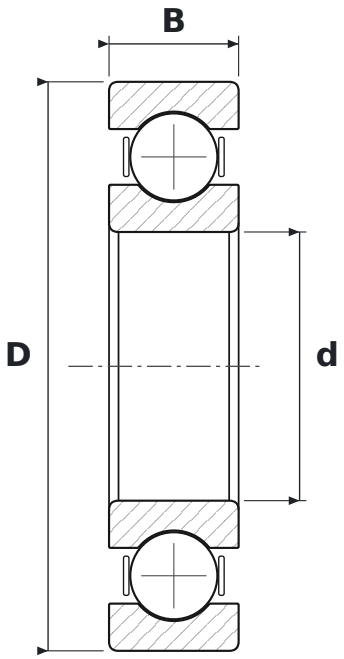

DIMENSIONS

d	bore diameter	**85 mm**
D	outside diameter	**180 mm**
B	width	**41 mm**

SPECIFICATIONS

Manufacturer	**FAG**
Manufacturer designation	**6317**
Rolling elements	**single-row ball bearing**
Seal	**open – no seals**
Radial internal clearance	**CN – normal**
Mass	**4.15 kg**