CASTOMER

DATASHEET

Deep groove ball bearing 6317-ZZC3 NSK

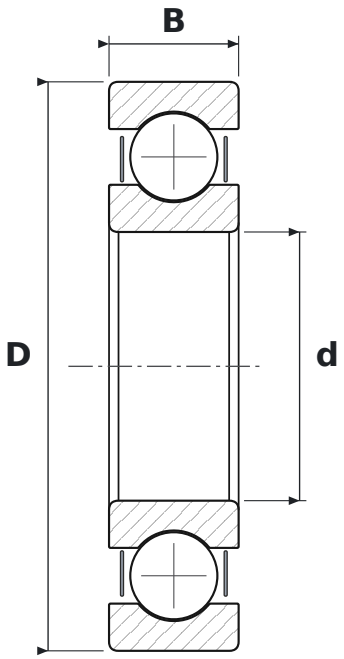

DIMENSIONS

d	bore diameter	**85 mm**
D	outside diameter	**180 mm**
B	width	**41 mm**

WHAT 6317-ZZC3 MEANS

63	łożysko kulkowe zwykłe (6), seria średnic 3 – średnia
ZZ	blaszki ochronne, dwustronne
C3	radial clearance greater than normal

SPECIFICATIONS

Manufacturer	**NSK**
Manufacturer designation	**6317-ZZC3**
Rolling elements	**single-row ball bearing**
Mass	**4.4 kg**