Deep groove ball bearing 6317 ZZXC3 KOYO

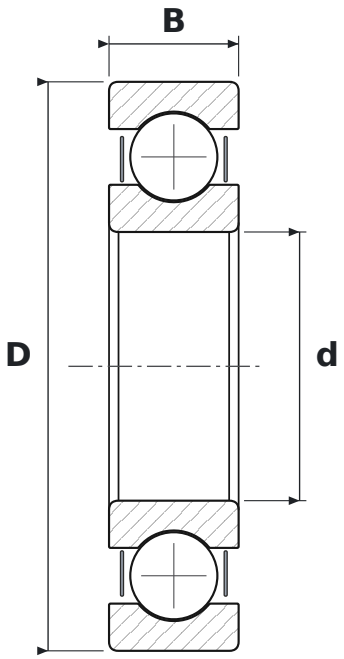

DIMENSIONS

d	bore diameter	**85 mm**
D	outside diameter	**180 mm**
B	width	**41 mm**

SPECIFICATIONS

Manufacturer	**KOYO**
Manufacturer designation	**6317 ZZXC3**
Rolling elements	**single-row ball bearing**
2Z	**steel shields, both sides**
C3	**radial clearance greater than normal**