Deep groove ball bearing 6318-2Z-C3 FAG

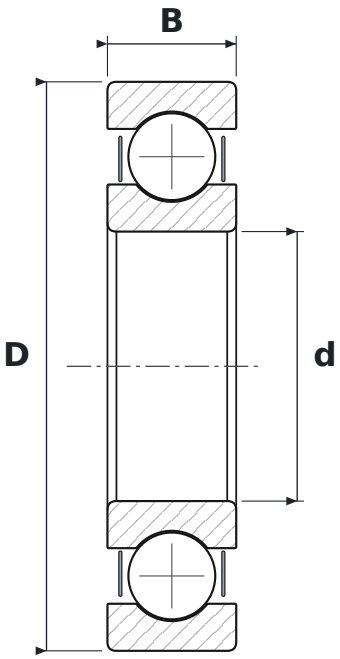

DIMENSIONS

d	bore diameter	**90 mm**
D	outside diameter	**190 mm**
B	width	**43 mm**

WHAT 6318-2Z-C3 MEANS

63	łożysko kulkowe zwykłe (6), seria średnic 3 – średnia
2Z	steel shields, both sides
C3	radial clearance greater than normal

SPECIFICATIONS

Manufacturer	**FAG**
Manufacturer designation	**6318-2Z-C3**
Rolling elements	**single-row ball bearing**
Mass	**5.37 kg**