Deep groove ball bearing 6318 Z NACHI

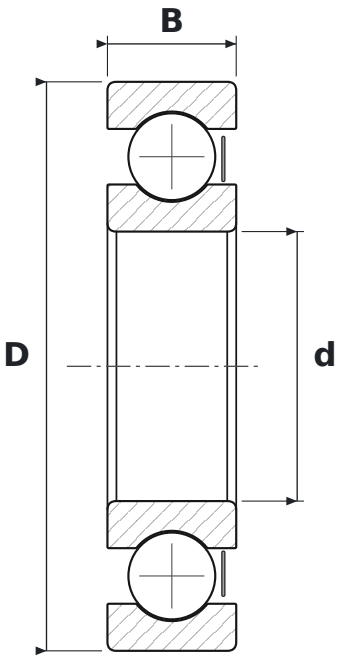

DIMENSIONS

d	bore diameter	**90 mm**
D	outside diameter	**190 mm**
B	width	**43 mm**

WHAT 6318 Z MEANS

63	łożysko kulkowe zwykłe (6), seria średnic 3 – średnia
Z	steel shield, one side

SPECIFICATIONS

Manufacturer	**NACHI**
Manufacturer designation	**6318 Z**
Rolling elements	**single-row ball bearing**