Deep groove ball bearing 6318 ZZXCM KOYO

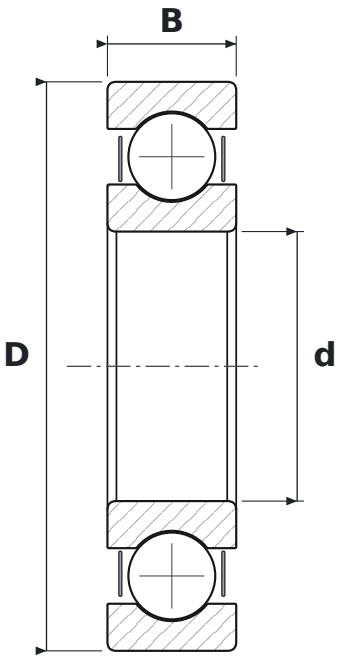

DIMENSIONS

d	bore diameter	**90 mm**
D	outside diameter	**190 mm**
B	width	**43 mm**

SPECIFICATIONS

Manufacturer	**KOYO**
Manufacturer designation	**6318 ZZXCM**
Rolling elements	**single-row ball bearing**
2Z	**steel shields, both sides**
CM	**luz promieniowy do łożysk silników elektrycznych**
Radial internal clearance	**CN – normal**