CASTOMER

DATASHEET

Deep groove ball bearing 6320-2ZC3 ZEN

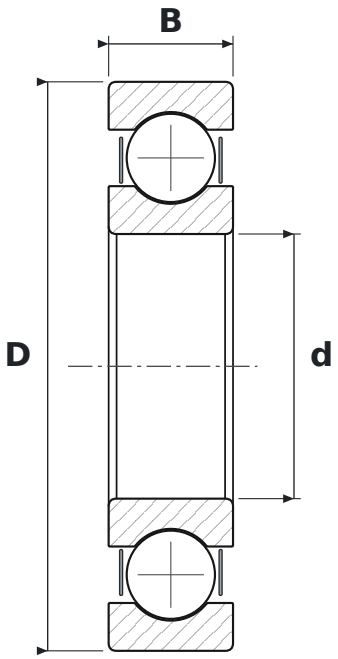

DIMENSIONS

d	bore diameter	**100 mm**
D	outside diameter	**215 mm**
B	width	**47 mm**

WHAT 6320-2ZC3 MEANS

63	łożysko kulkowe zwykłe (6), seria średnic 3 – średnia
2Z	steel shields, both sides
C3	radial clearance greater than normal

SPECIFICATIONS

Manufacturer	**ZEN**
Manufacturer designation	**6320-2ZC3**
Rolling elements	**single-row ball bearing**
Mass	**7 kg**