Deep groove ball bearing 6320-ZC3 NSK

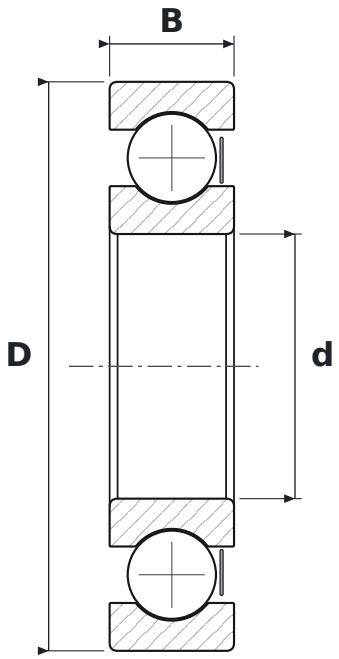

DIMENSIONS

d	bore diameter	**100 mm**
D	outside diameter	**215 mm**
B	width	**47 mm**

WHAT 6320-ZC3 MEANS

63	łożysko kulkowe zwykłe (6), seria średnic 3 – średnia
Z	steel shield, one side
C3	radial clearance greater than normal

SPECIFICATIONS

Manufacturer	**NSK**
Manufacturer designation	**6320-ZC3**
Rolling elements	**single-row ball bearing**
Mass	**7.4 kg**