Deep groove ball bearing 6320 ZZXCM KOYO

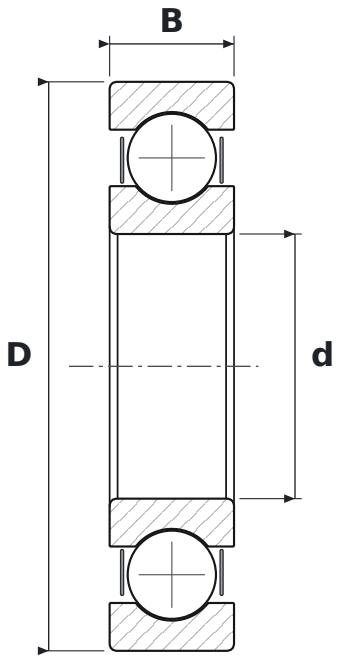

DIMENSIONS

d	bore diameter	**100 mm**
D	outside diameter	**215 mm**
B	width	**47 mm**

SPECIFICATIONS

Manufacturer	**KOYO**
Manufacturer designation	**6320 ZZXCM**
Rolling elements	**single-row ball bearing**
2Z	**steel shields, both sides**
CM	**luz promieniowy do łożysk silników elektrycznych**
Radial internal clearance	**CN – normal**