# Deep groove ball bearing 6321 C3 NACHI

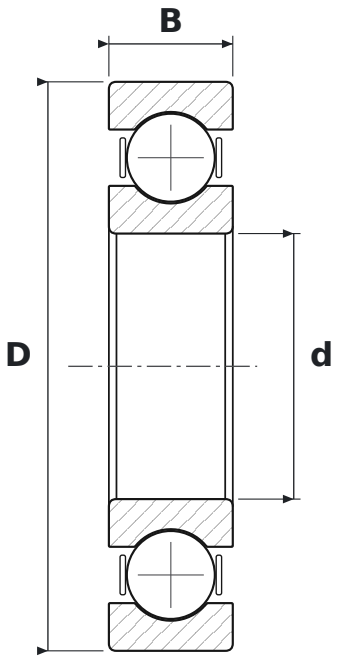


## DIMENSIONS

| | | |
|---|---|---|
| **d** | bore diameter | **105 mm** |
| **D** | outside diameter | **225 mm** |
| **B** | width | **49 mm** |

## WHAT 6321 C3 MEANS

| | |
|---|---|
| **63** | łożysko kulkowe zwykłe (6), seria średnic 3 – średnia |
| **C3** | radial clearance greater than normal |

## SPECIFICATIONS

| | |
|---|---|
| Manufacturer | **NACHI** |
| Manufacturer designation | **6321 C3** |
| Rolling elements | **single-row ball bearing** |