Deep groove ball bearing 6321 C4 NTN

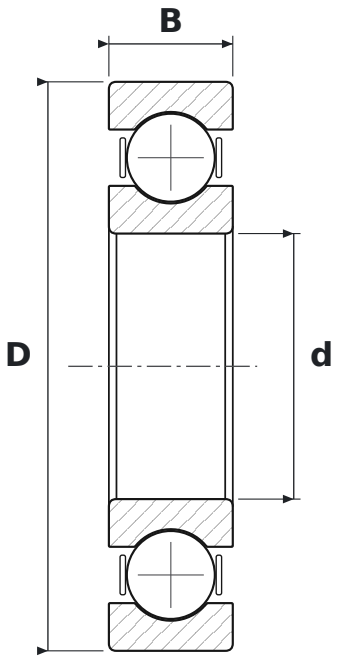

DIMENSIONS

d	bore diameter	**105 mm**
D	outside diameter	**225 mm**
B	width	**49 mm**

WHAT 6321 C4 MEANS

63	łożysko kulkowe zwykłe (6), seria średnic 3 – średnia
C4	large radial clearance

SPECIFICATIONS

Manufacturer	**NTN**
Manufacturer designation	**6321 C4**
Rolling elements	**single-row ball bearing**
Mass	**8.2 kg**