Deep groove ball bearing 6321 NACHI

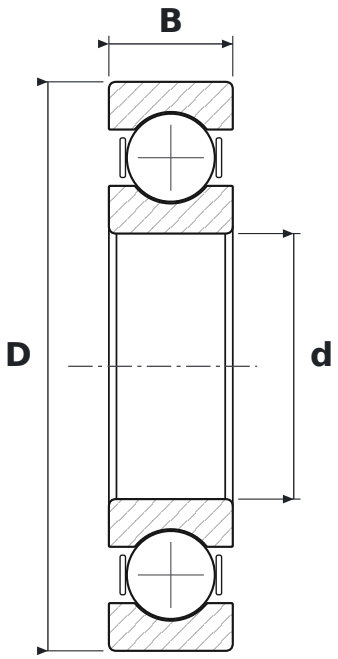

DIMENSIONS

d	bore diameter	**105 mm**
D	outside diameter	**225 mm**
B	width	**49 mm**

SPECIFICATIONS

Manufacturer	**NACHI**
Manufacturer designation	**6321**
Rolling elements	**single-row ball bearing**
Seal	**open – no seals**
Radial internal clearance	**CN – normal**