Deep groove ball bearing 6322-2Z ZEN

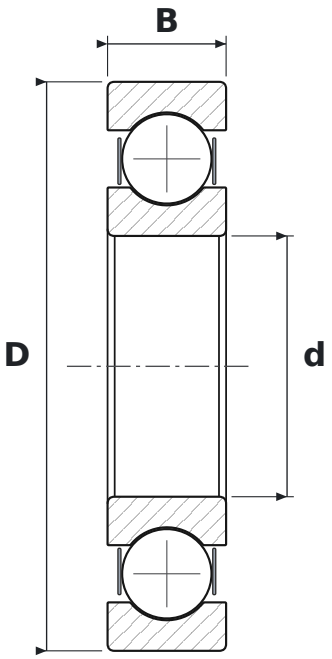

DIMENSIONS

d	bore diameter	**110 mm**
D	outside diameter	**240 mm**
B	width	**50 mm**

WHAT 6322-2Z MEANS

63	łożysko kulkowe zwykłe (6), seria średnic 3 – średnia
2Z	steel shields, both sides

SPECIFICATIONS

Manufacturer	**ZEN**
Manufacturer designation	**6322-2Z**
Rolling elements	**single-row ball bearing**
Mass	**9.798 kg**