Deep groove ball bearing 6322 SNR

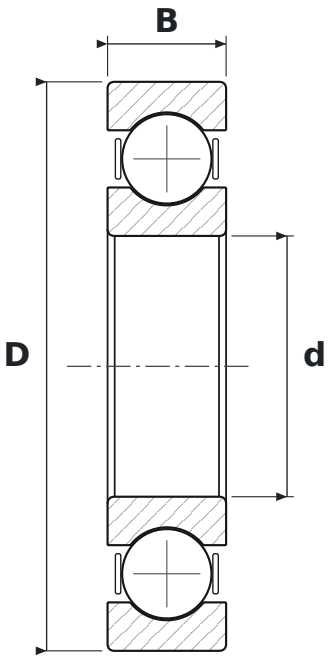

DIMENSIONS

d	bore diameter	**110 mm**
D	outside diameter	**240 mm**
B	width	**50 mm**

SPECIFICATIONS

Manufacturer	**SNR**
Manufacturer designation	**6322**
Rolling elements	**single-row ball bearing**
Seal	**open – no seals**
Radial internal clearance	**CN – normal**