Deep groove ball bearing 6322-ZZ-C3 TIMKEN

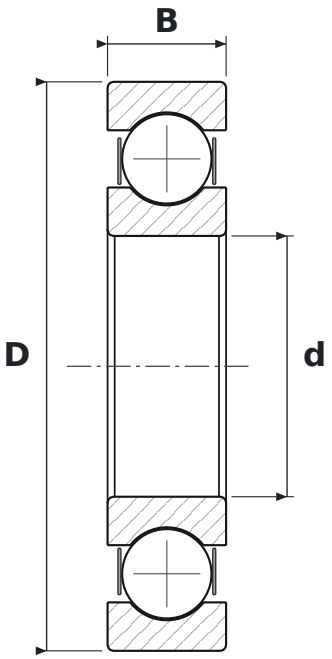

DIMENSIONS

d	bore diameter	**110 mm**
D	outside diameter	**240 mm**
B	width	**50 mm**

WHAT 6322-ZZ-C3 MEANS

63	łożysko kulkowe zwykłe (6), seria średnic 3 – średnia
ZZ	blaszki ochronne, dwustronne
C3	radial clearance greater than normal

SPECIFICATIONS

Manufacturer	**TIMKEN**
Manufacturer designation	**6322-ZZ-C3**
Rolling elements	**single-row ball bearing**