Deep groove ball bearing 6324 C3 NTN

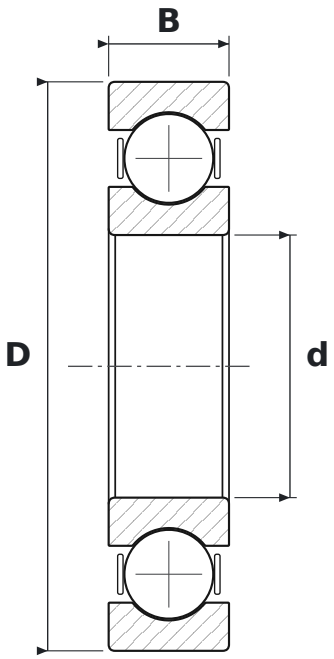

DIMENSIONS

d	bore diameter	**120 mm**
D	outside diameter	**260 mm**
B	width	**55 mm**

WHAT 6324 C3 MEANS

63	łożysko kulkowe zwykłe (6), seria średnic 3 – średnia
C3	radial clearance greater than normal

SPECIFICATIONS

Manufacturer	**NTN**
Manufacturer designation	**6324 C3**
Rolling elements	**single-row ball bearing**