Deep groove ball bearing 6324 ZZXC3 KOYO

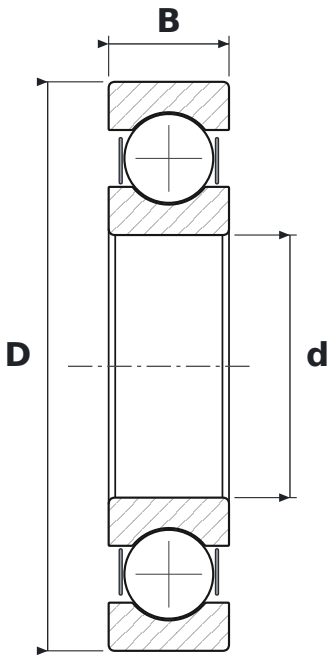

DIMENSIONS

d	bore diameter	**120 mm**
D	outside diameter	**260 mm**
B	width	**55 mm**

SPECIFICATIONS

Manufacturer	**KOYO**
Manufacturer designation	**6324 ZZXC3**
Rolling elements	**single-row ball bearing**
2Z	**steel shields, both sides**
C3	**radial clearance greater than normal**