Deep groove ball bearing 6328 M SKF

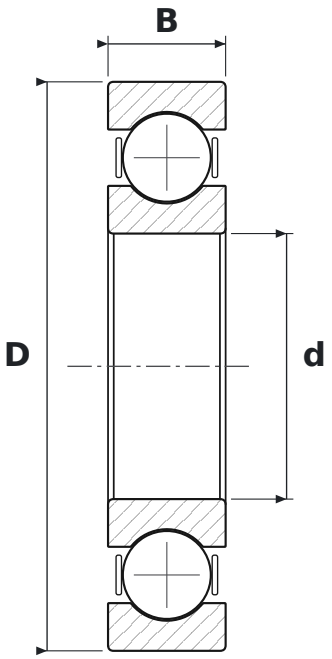

DIMENSIONS

d	bore diameter	**140 mm**
D	outside diameter	**300 mm**
B	width	**62 mm**

WHAT 6328 M MEANS

63	łożysko kulkowe zwykłe (6), seria średnic 3 – średnia
M	machined brass cage

SPECIFICATIONS

Manufacturer	**SKF**
Manufacturer designation	**6328 M**
Rolling elements	**single-row ball bearing**
Mass	**21.616 kg**