Deep groove ball bearing 6328-M-C3 FAG

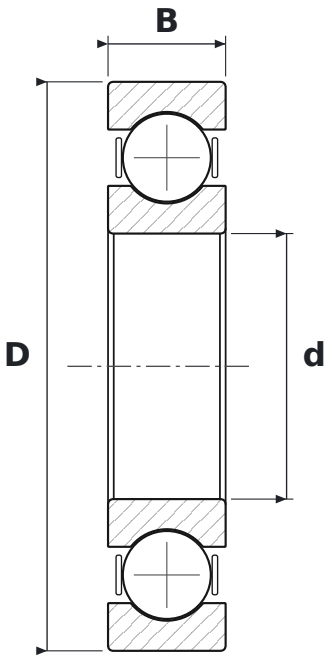

DIMENSIONS

d	bore diameter	**140 mm**
D	outside diameter	**300 mm**
B	width	**62 mm**

WHAT 6328-M-C3 MEANS

63	łożysko kulkowe zwykłe (6), seria średnic 3 – średnia
M	machined brass cage
C3	radial clearance greater than normal

SPECIFICATIONS

Manufacturer	**FAG**
Manufacturer designation	**6328-M-C3**
Rolling elements	**single-row ball bearing**
Mass	**22.02 kg**