Deep groove ball bearing 6330 C3 SKF

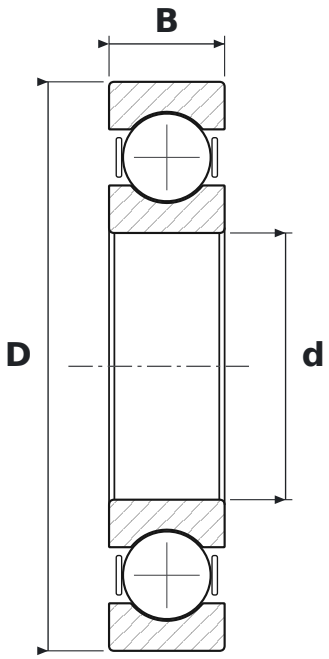

DIMENSIONS

d	bore diameter	**150 mm**
D	outside diameter	**320 mm**
B	width	**65 mm**

WHAT 6330 C3 MEANS

63	łożysko kulkowe zwykłe (6), seria średnic 3 – średnia
C3	radial clearance greater than normal

SPECIFICATIONS

Manufacturer	**SKF**
Manufacturer designation	**6330 C3**
Rolling elements	**single-row ball bearing**
Mass	**22.91 kg**