CASTOMER

DATASHEET

Deep groove ball bearing 6336-M-C3 NKE

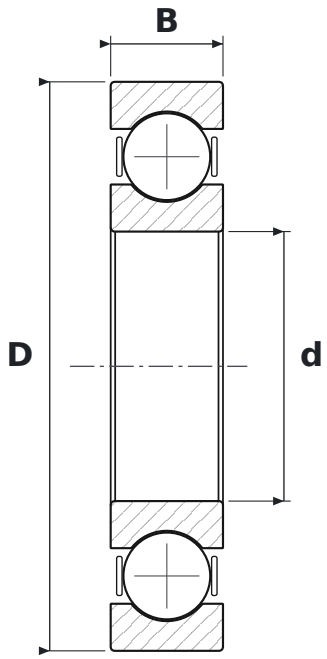

DIMENSIONS

d	bore diameter	**180 mm**
D	outside diameter	**380 mm**
B	width	**75 mm**

WHAT 6336-M-C3 MEANS

63	łożysko kulkowe zwykłe (6), seria średnic 3 – średnia
M	machined brass cage
C3	radial clearance greater than normal

SPECIFICATIONS

Manufacturer	**NKE**
Manufacturer designation	**6336-M-C3**
Rolling elements	**single-row ball bearing**