Deep groove ball bearing 6336 M NSK

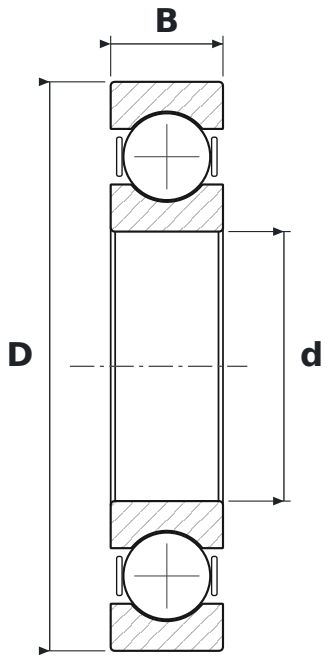

DIMENSIONS

d	bore diameter	**180 mm**
D	outside diameter	**380 mm**
B	width	**75 mm**

WHAT 6336 M MEANS

63	łożysko kulkowe zwykłe (6), seria średnic 3 – średnia
M	machined brass cage

SPECIFICATIONS

Manufacturer	**NSK**
Manufacturer designation	**6336 M**
Rolling elements	**single-row ball bearing**
Mass	**43 kg**