Deep groove ball bearing 638/8-2Z SKF

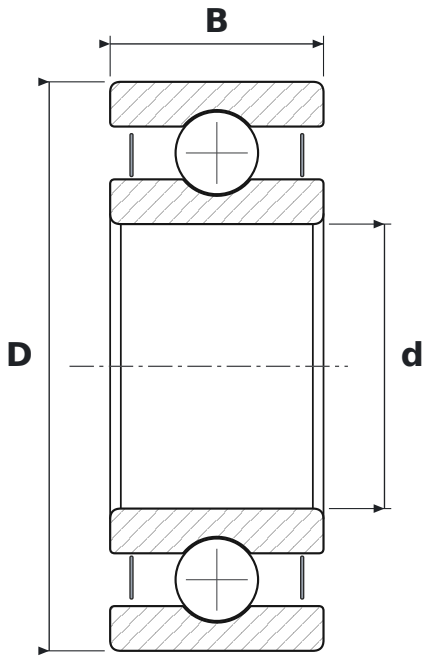

DIMENSIONS

d	bore diameter	**8 mm**
D	outside diameter	**16 mm**
B	width	**6 mm**

SPECIFICATIONS

Manufacturer	**SKF**
Manufacturer designation	**638/8-2Z**
Rolling elements	**single-row ball bearing**
2Z	**steel shields, both sides**
Radial internal clearance	**CN – normal**
Mass	**0.004 kg**