Deep groove ball bearing 6406 C3 KOYO

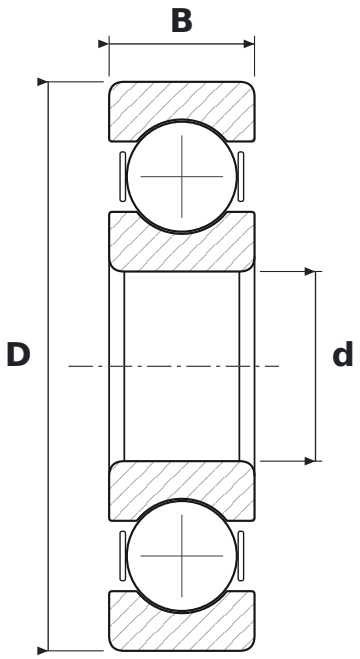

DIMENSIONS

d	bore diameter	**30 mm**
D	outside diameter	**90 mm**
B	width	**23 mm**

WHAT 6406 C3 MEANS

64	łożysko kulkowe zwykłe (6), seria średnic 4 – ciężka
C3	radial clearance greater than normal

SPECIFICATIONS

Manufacturer	**KOYO**
Manufacturer designation	**6406 C3**
Rolling elements	**single-row ball bearing**